POWER WINDOW (LHD)

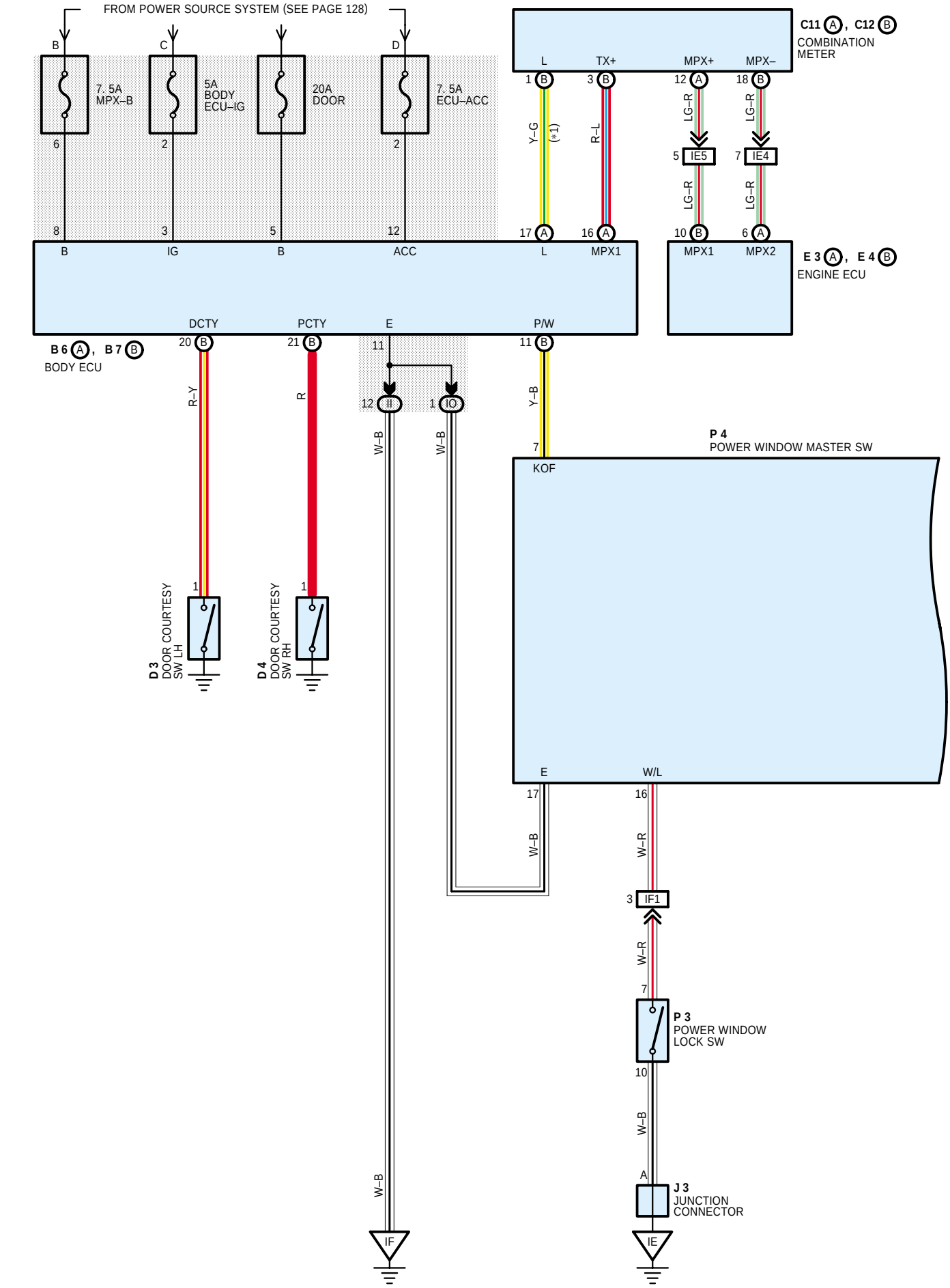

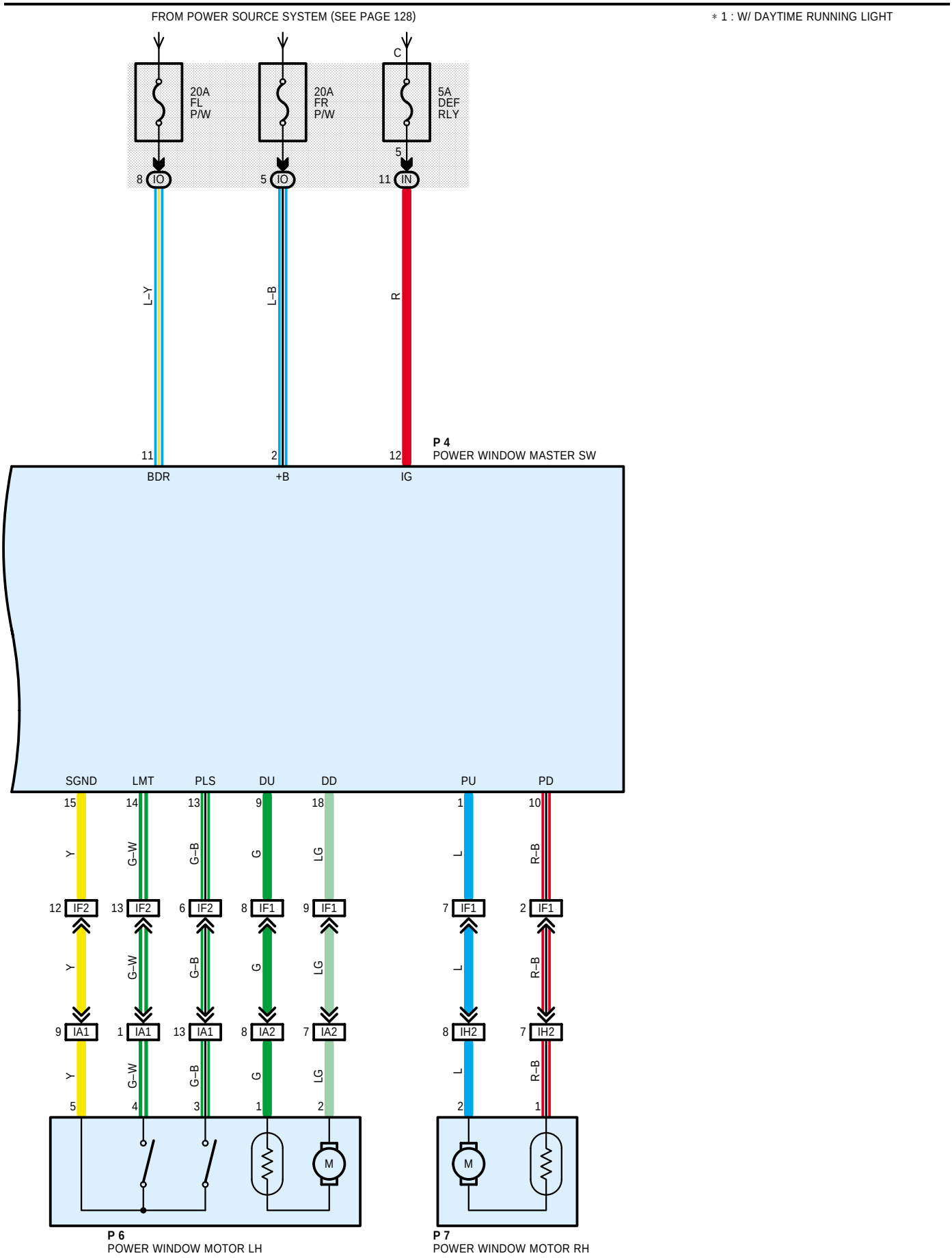
FROM POWER SOURCE SYSTEM (SEE PAGE 128)
* 1 : W/ DAYTIME RUNNING LIGHT
20A FL P/W
20A FR P/W
C
5A DEF RLY
5
8 IO
5 IO
11 IN
L–Y
L–B
R
11
2
12
P 4
POWER WINDOW MASTER SW
BDR
+B
IG
SGND
LMT
PLS
DU
DD
PU
PD
15
14
13
9
18
1
10
Y
G–W
G–B
G
LG
L
R–B
12 IF2
13 IF2
6 IF2
8 IF1
9 IF1
7 IF1
2 IF1
9 IA1
1 IA1
13 IA1
8 IA2
7 IA2
8 IH2
7 IH2
5
4
3
1
2
2
1
M
M
P 6
POWER WINDOW MOTOR LH
P 7
POWER WINDOW MOTOR RH